REV	CHANGE RECORD AND DATE	CH
A	RELEASE 10-11-00	DJM

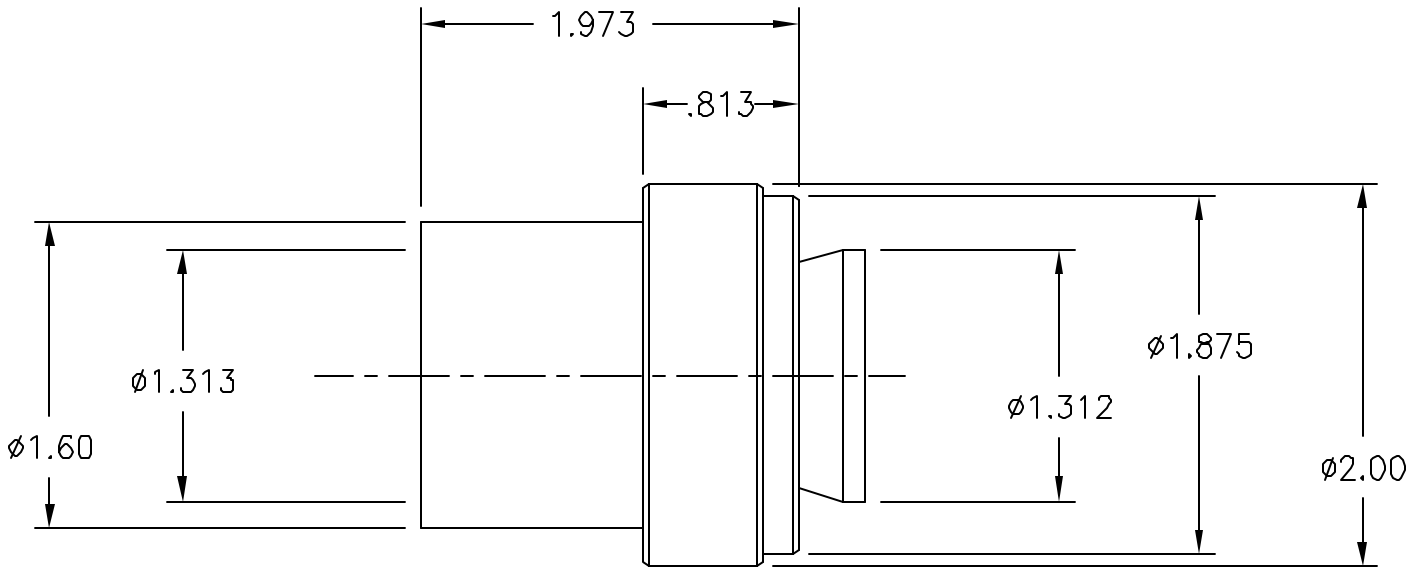

NEXT ASSY. | USED ON

MATERIAL

FINISH

CHAMFER ALL THREADS 30° TO ROOT DIAM.

UNLESS OTHERWISE SPECIFIED
DIMENSIONS ARE IN INCHES AND INCLUDE CHEMICALLY APPLIED OR PLATED FINISHES

TOLERANCES AS FOLLOWS

DEC. .XXX	±.005
DEC. .XX	±.010
FRACT.	±1/64
ANGLES	±30'
CONCENTRICITY	.003 TIR

BREAK ALL SHARP EDGES .005 MIN. .010 MAX.
MAX. SURF. ROUGHNESS 32

SCALE	1:1
DR.	DJM
CH.	PB
APP.	
DATE DR.	10-11-00
DO NOT SCALE DRAWING	

P/N Suffix Definition
-1 Conversion Coating
-2 Painting
-3 Marking
-R Rework

0.0 inch 1.0
0.0 mm 25.0

NAVITAR
ROCHESTER, NEW YORK

ANALYZER OUTLINE

SIZE A

1-60816 OL
SHT. 1 OF 1

REV A